frisco.
better pet goods

62 IN
HEIGHT

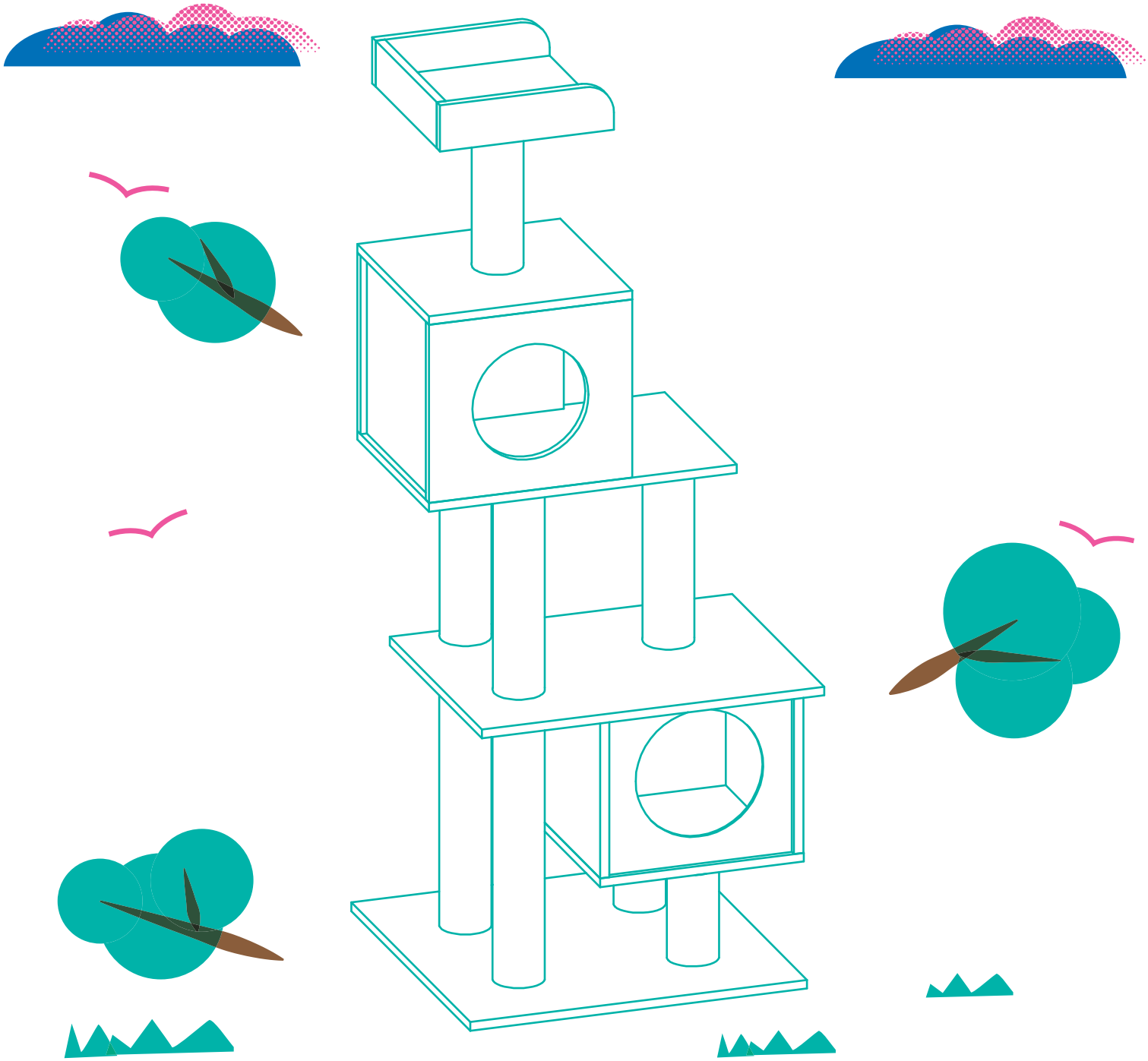

SKU# 177901,177902
OVERALL DIMENSIONS
25.5 in L x 22.8 in W x 62 in H
64.5 cm L x 58 cm W x 157.5 cm H
BASEBOARD DIMENSIONS
22.8 in L x 22.8 in W
58 cm L x 58 cm W

CAT TREE

INSTRUCTION MANUAL

WARNINGS & CAUTIONS

PLEASE READ AND FOLLOW ALL WARNINGS AND INSTRUCTIONS TO AVOID PET INJURY OR PROPERTY DAMAGE.

· Keep all tools and instructions in a safe place for future reference.
· Follow the instructions carefully and make sure you've completed each step.
· This cat tree is intended for cat use only, please keep children away.
· Keep all small parts away from children / pets to avoid choking hazards.
· Never climb, rock, shake, step or hang on the cat tree.
· Place your cat tree indoors, away from direct sunlight or damp areas.
· Cat trees should be placed on a flat, level surface for stability.
· Check your cat tree often for loose screws or parts that might need re-tightening.
· If your cat tree gets torn or damaged, please discard it.
· The product photo may vary slightly from your fully assembled cat tree as this product is continually being enhanced.

CLEANING INSTRUCTIONS

Spot clean stains and vacuum fur (using small handheld or attachment) when necessary.

COMPONENTS

Prior to assembly, be sure to identify and sort all components shown below.

GEAR UP

You'll need a Philips head screwdriver (not included) to complete the assembly.

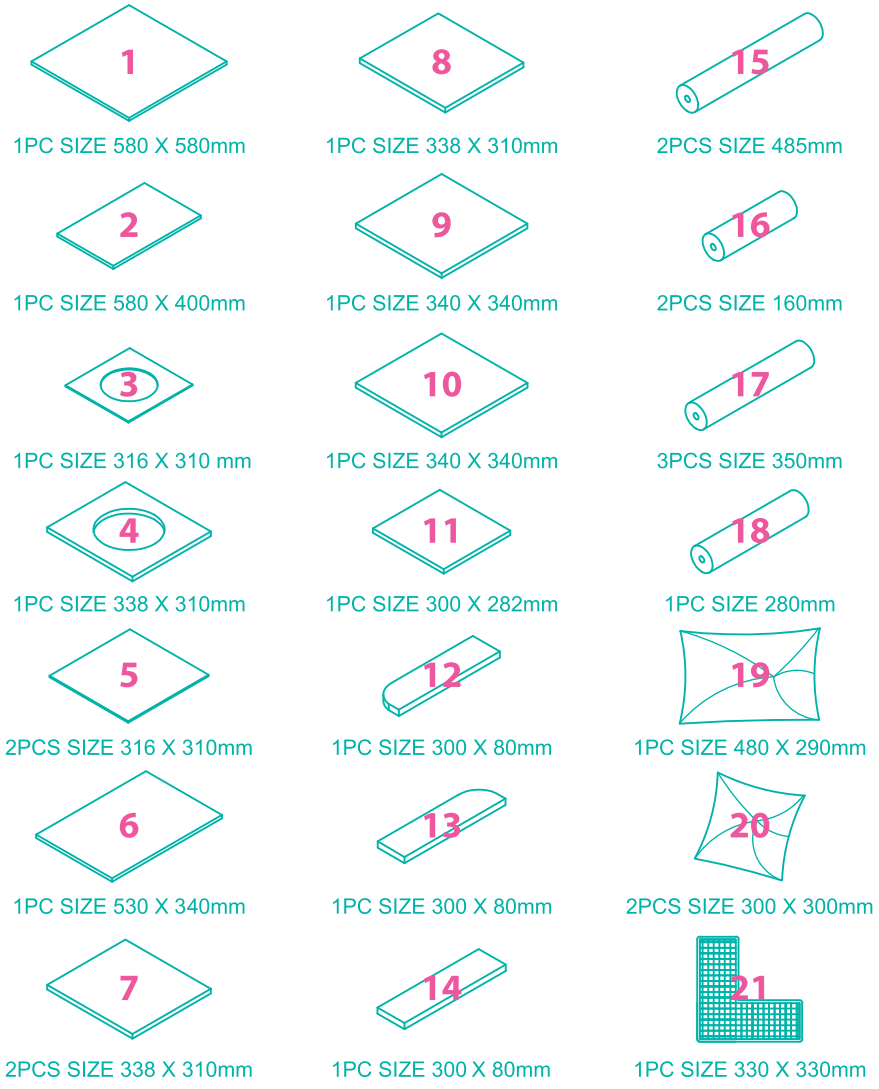

A	Cam Locks	24PCS +1 Extra
B	Cam Lock Bolts	24PCS +1 Extra
C	8 x 40mm Wooden Dowels	18PCS +2 Extra
D	Φ35mm Non-Skid Pad	4PCS
E	M10 x 40mm Bolt	12PCS
F	50 x 50mm Bracket	1PC
G	M6 x12mm Bolt	1PC
H	18mm Washer	1PC
I	5 x 30mm Drywall Anchor	1PC
J	M4.8 x 30mm Screw	1PC
K	M10 x 85mm Double-sided Bolt	2PCS
	5mm Wrench	1PC
	4mm Wrench	1PC

ASSEMBLY INSTRUCTIONS

STEP 1

For non-skid pads attachment, peel the paper backing on the pad and press down firmly to adhere, repeat for other 3 pads.

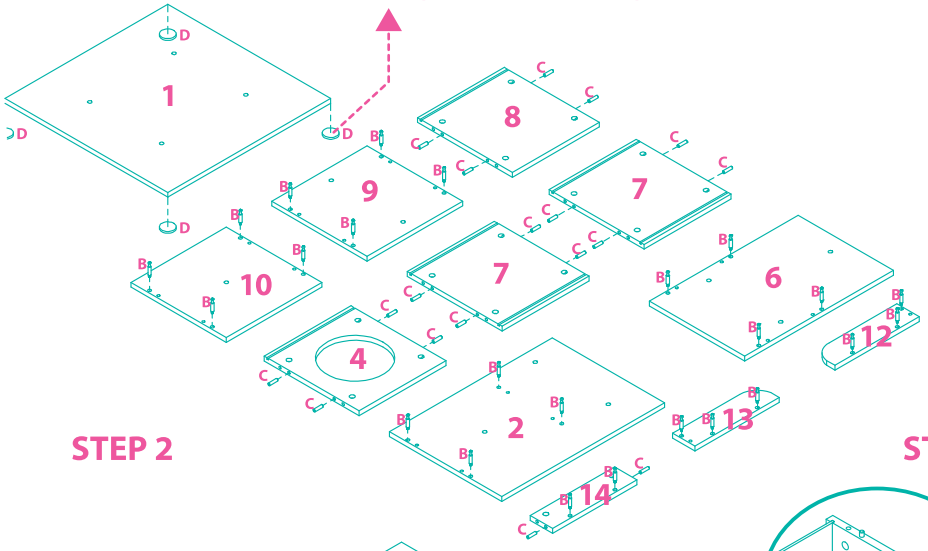

STEP 2

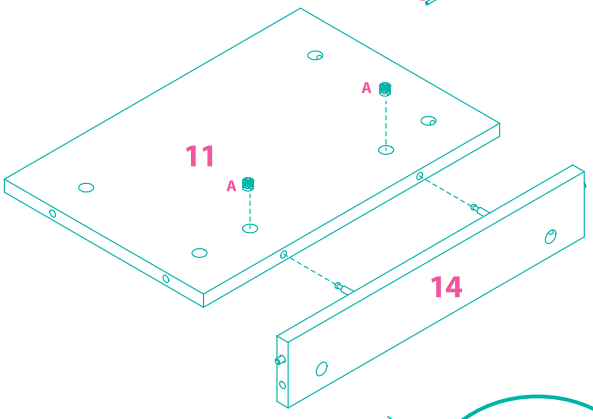

Please make sure to tighten all 2 cam locks.

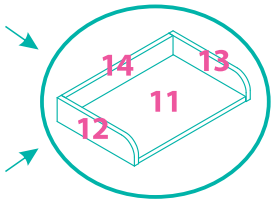

STEP 3

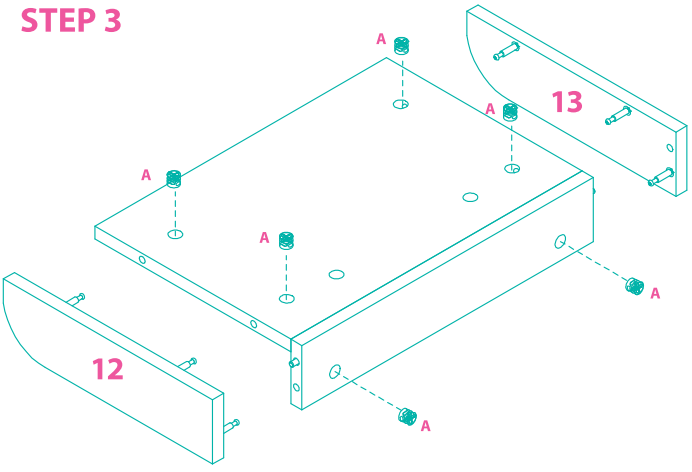

Please make sure to tighten all 6 cam locks.

STEP 4

Please make sure to tighten all 4 cam locks.

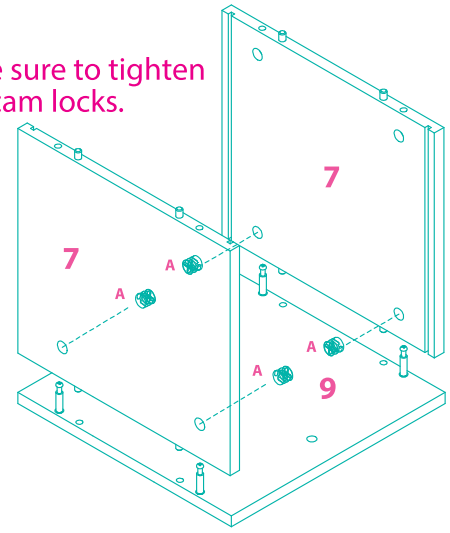

STEP 5

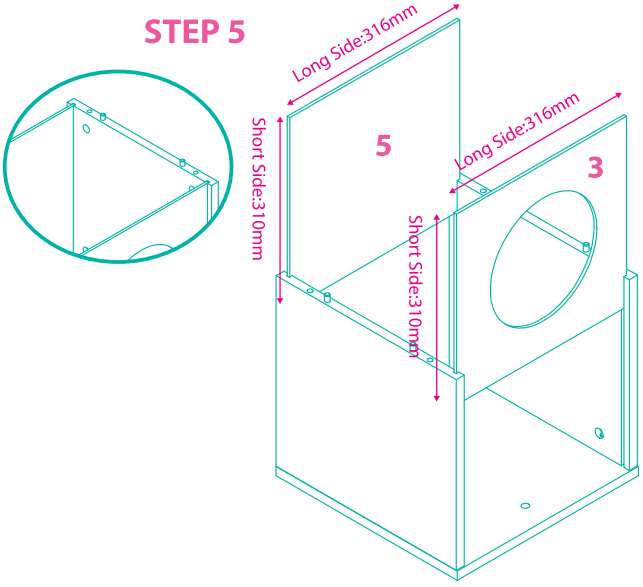

Please lean the housing at an angle for easier cam locks tightening.

STEP 6

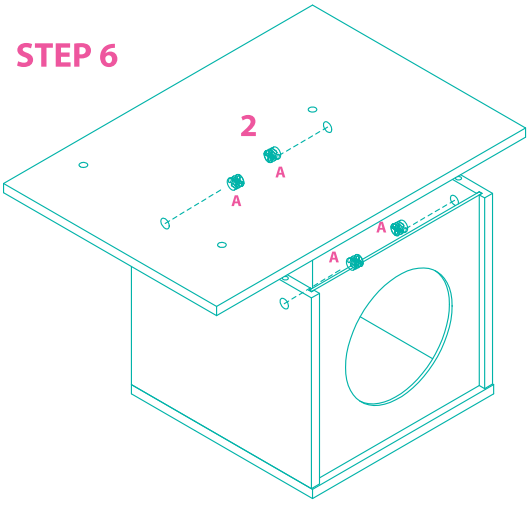

Please make sure to tighten all 4 cam locks.

Available exclusively at chewy.com 1-800-672-4399

ASSEMBLY INSTRUCTIONS

STEP 7

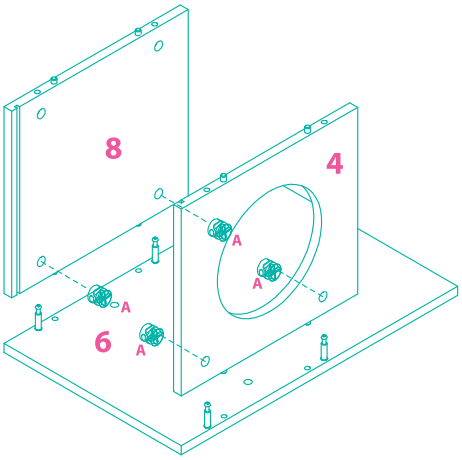

Please make sure to tighten all 4 cam locks.

STEP 8

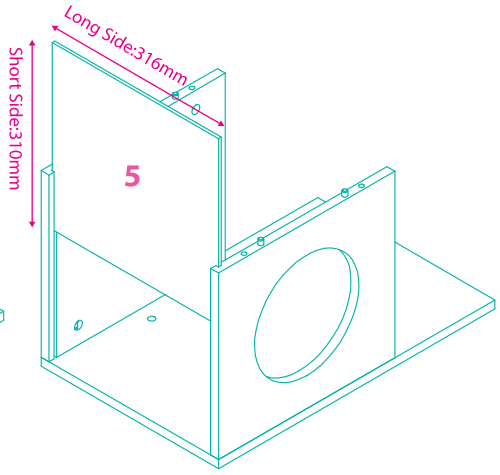

STEP 9

Please lean the housing at an angle for easier cam locks tightening.

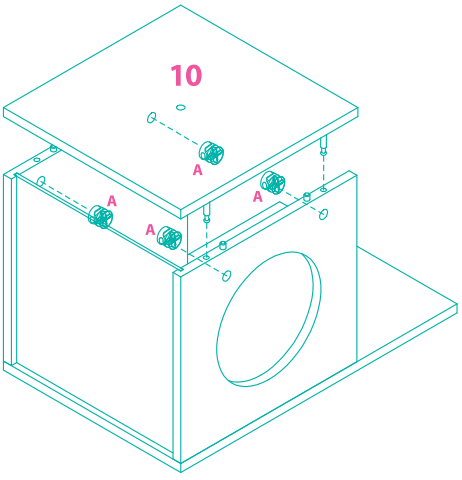

Please make sure to tighten all 4 cam locks.

STEP 10

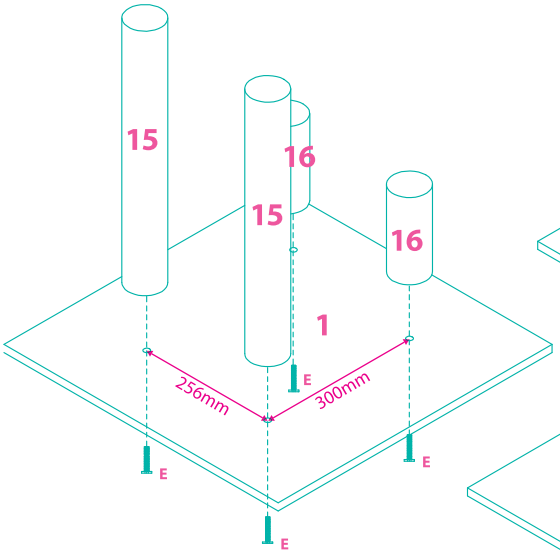

STEP 11

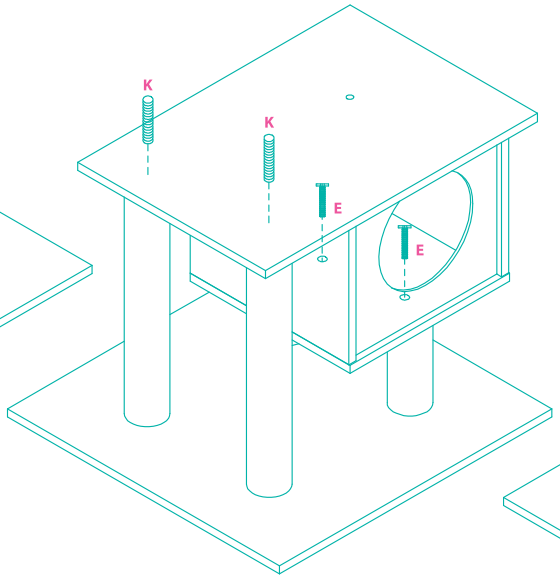

STEP 12

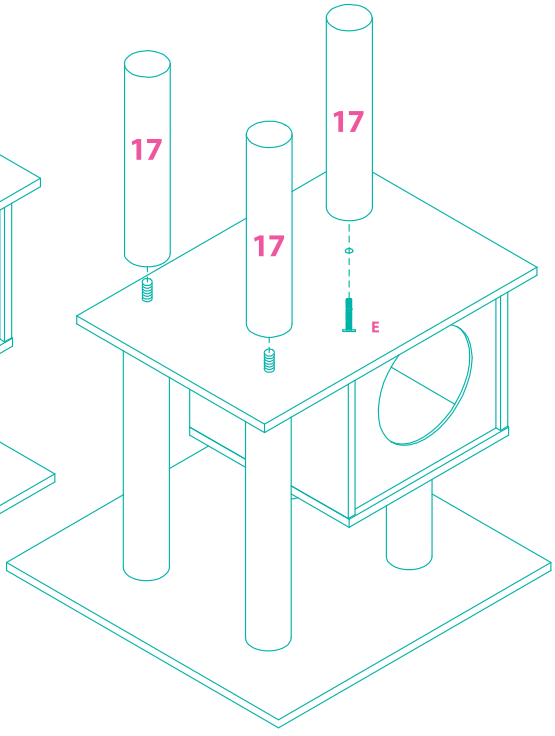

STEP 13

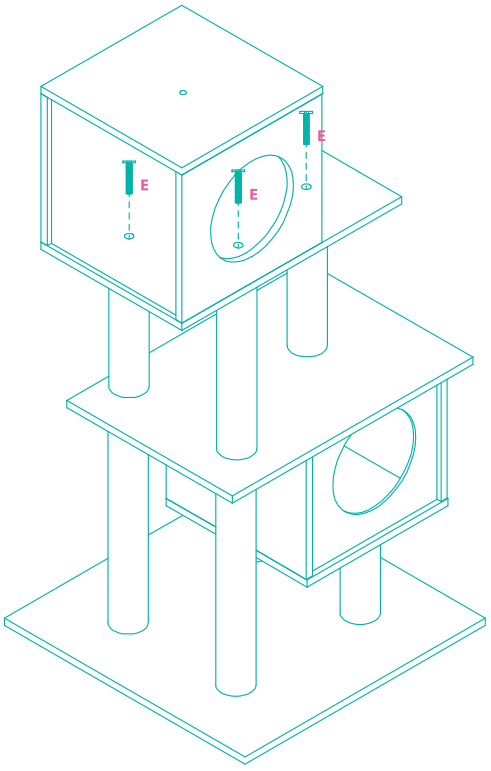

STEP 14

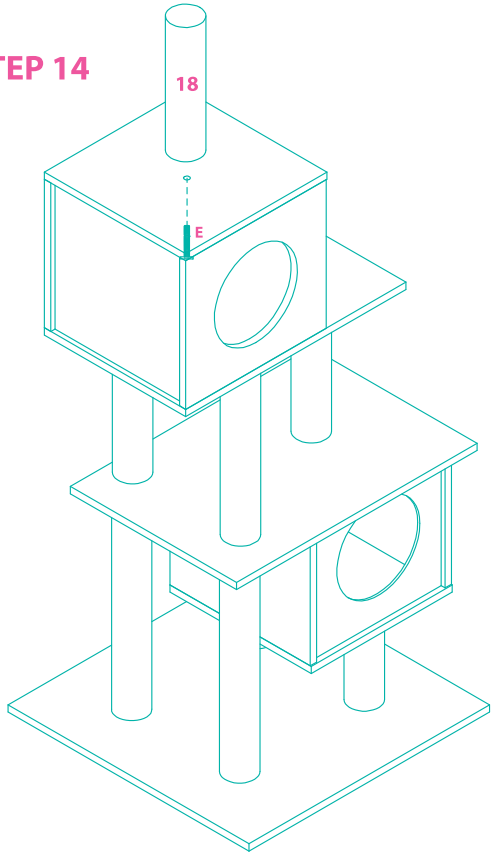

STEP 15

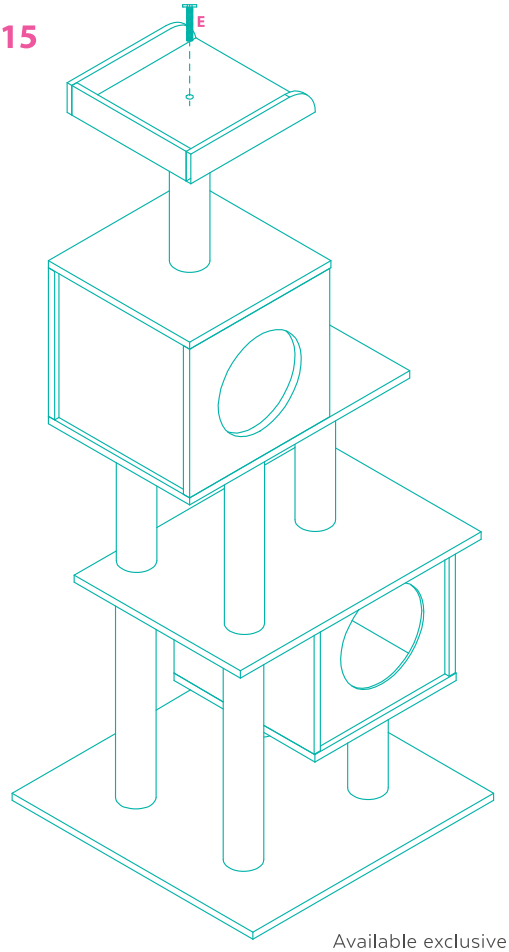

FINISHED ASSEMBLY

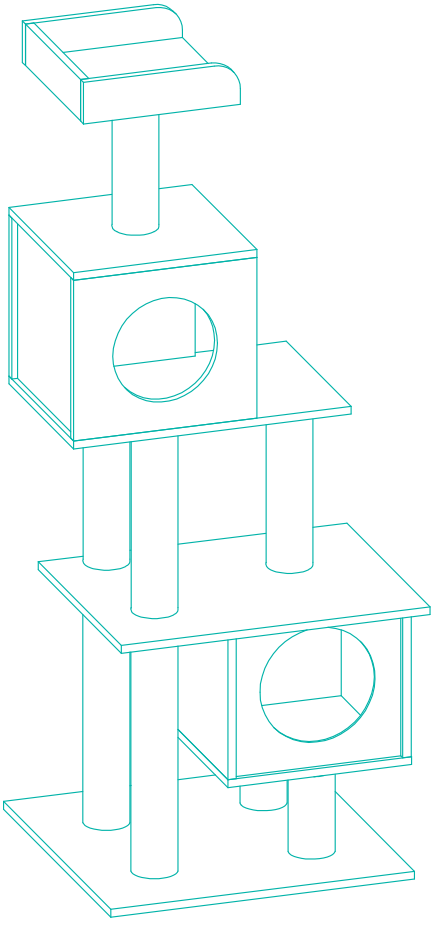
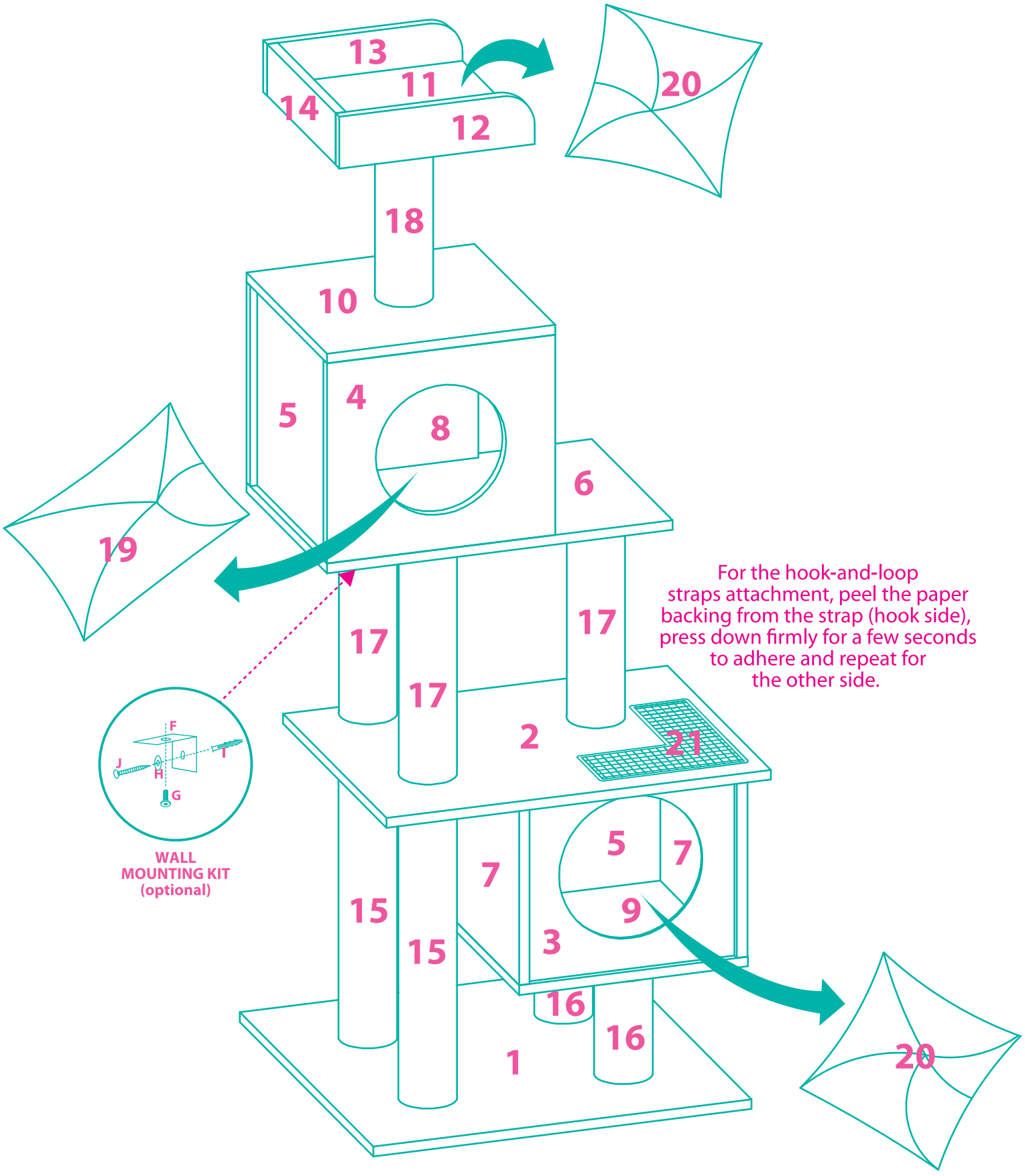
FULL ASSEMBLY